Bharatiya Vidya Bhavan's

SARDAR PATEL COLLEGE OF ENGINEERING

(Government Aided Autonomous Institute)

Munshi Nagar, Andheri (W) Mumbai – 400058

FINAL YEAR PROJECT REPORT

A.Y. 2021-22

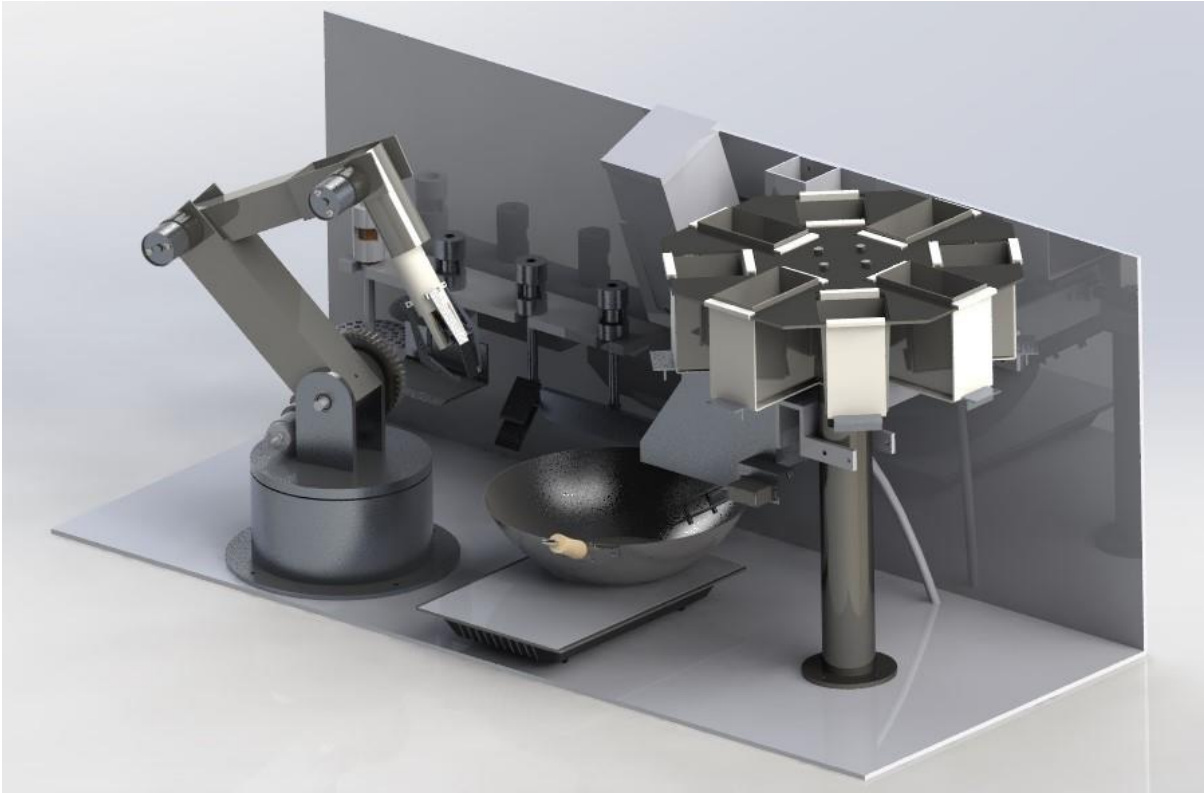

By: Kshitika Gala, Manav Mepani, Tanish Mishra

Department of Mechanical Engineering, Sardar Patel College of Engineering, Mumbai

Guide: Dr. Kiran S. Bhole

Index

Chapter 1. Abstract 4

Chapter 2. Introduction 5

Chapter 3. Design 7

3.1 Design goals 7

3.2 Methodology 7

3.3 Preliminary Functional Design 8

3.4 Detail design 9

Chapter 4. Analysis & Simulation 16

4.1 Structural Analysis 16

4.2 Thermal Analysis 18

4.3 Simulation & Kinematic Analysis 21

Chapter 5. Fabrication & Testing 24

5.1 Manufacturing Methodology 24

5.2 Electronics 27

5.3 The Code 29

5.4 Testing 30

Chapter 6. Results & Discussion 31

7.1 Results & Conclusion 31

7.2 Future Scope 32

Chapter 7. References 33

Acknowledgements

We would like to first thank Sardar Patel College of Engineering, Mumbai for the knowledge & constant support they have provided at all levels. Next, we would like to thank our guide Dr. Kiran S. Bhole who has made the entire project process seamless and helped us at every point possible. We thank the SPCE Robocon team for providing us with space and equipment required to manufacture our project. We are deeply grateful to Dr. N. Raykar, for providing feedback & suggestions which helped during the design phase; Mr. Sanjeev Sarnaik and his associates at Prasanna Packaging Machinery Pvt. Ltd., for providing industrial feedback and future manufacturing & fabrication support. We would also like to thank Prof. Jayram Gholave for providing Chemistry lab equipment for experimental validation of Thermal Analysis. We thank our co-guide Dr. Sangeeta Daingade from the Department of Electrical Engineering for her support and knowledge about the electronics and control system that was incorporated in the design.

1. Abstract

Robotic arms, by virtue of their versatility, find extensive usage in industry-level applications; from mechanical operations like welding and assembling to painting and sorting. Capitalizing on their relative absence in the household domain, and the increasing pervasiveness of domestic automation, this project seeks to develop a robot arm designed for carrying out operations involved in independently cooking a wide variety of food. The design, which aims to minimize cost while maximizing versatility; has been explained thoroughly, including choice of materials, degrees of freedom, actuators, linkage cross-sections, and sensors. The purview of necessary elementary motions is narrowed down by targeting specific recipes that the arm will be expected to cook. Further, a mechanism for dispensing appropriately proportioned ingredients has also been described, including bulk matter like vegetables as well as minor ingredients like spices and seasoning. Stress-Deformation Analysis has been carried out for verification of structural integrity of the most crucial components in the structure of the arm. The ultimate objective of this project is to develop a proof of concept for a household cooking robot by building on existing research in the domain.

2. Introduction

Cooking is an everyday activity that demands a substantial amount of time and effort, a commitment that is becoming increasingly infeasible in the competitive environment of the modern world. We have different machines to assist us in our chores like washing clothes and dishes but nothing to cook food. Automation in cooking is well established at an industrial level and some examples of robotics vendors catering to restaurants exist as well [1]. The perception of the general public towards these robots also indicates an increase in their proliferation over time [2]. This project, however, capitalizes on the relative absence of such systems at the domestic level. It proposes a robotic system to automate cooking at this level, the emphasis being on making said system compact and affordable.

This venture into domestic cooking automation is not entirely unprecedented. Li et al [3] proposed a system to effectively cook Chinese recipes using a specialized 3 DOF mechanism that manipulates the cooking vessel. Start-ups like Nosh, Nymble, Mechanical Chef, etc also possess automated cooking systems but remain inaccessible due to their high cost. Further, such existing systems, for a lack of redundant degrees of freedom, cannot effectively carry out all actions necessary for cooking a large variety of dishes the way a human being can. [4-9]

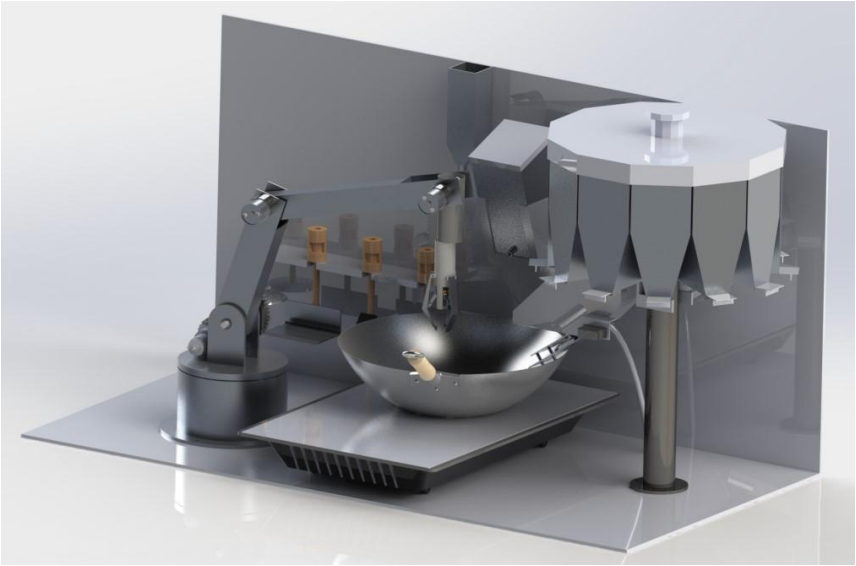

Fig. 1. CAD model of the proposed system with all its components.

Noh et al [6], in their design, employ 2 robotic arms that mimic human movement which has resulted in extremely high versatility. Their system, however, takes up considerable space and is difficult to accommodate

in an average household kitchen. Additionally, due to the large number of sophisticated actuators it requires, the associated costs are high. Hence, this project hopes to achieve a compromise by using a single serial manipulator, trading some maneuverability for significantly reduced costs and space. Fig. 1 denotes the entire system with all its components in their appropriate relative positions.

3. Design

3.1. Design goals

A few Design Objectives were laid down before the start of the designing process.

- The system must be able to carry out elementary cooking actions like stirring, flipping, mashing.
- Must be able to cook using entirely raw, pre-sliced ingredients.
- Human intervention must be minimized and versatility must be maximized.
- Complexity of design must be minimized.

3.2. Methodology

- The dual arm manipulator by Noh et al at UCLA possesses very high versatility but has a commensurately high cost due to a large number of actuators while taking up a lot of space. A single actuator costs tens of thousands of rupees. On the other hand, this chinese dish making design by Li et al is optimized only for flipping and tossing actions but is relatively affordable. Thus, there is room for innovation somewhere in between.
- By this it became clear that cost and versatility are directly proportional.
- We divided our design into 2 main parts: Robotic arm & dispensing mechanism.
- We decided to go with a 6 DOF robotic arm to have sufficient dexterity while trying to keep it low cost.
- Different containers and dispensing mechanisms for liquid & solid ingredients were designed.
- A preliminary pen & paper design was created to adjust all components
- Once we had a clear idea of what we need and what will be placed where, we started CAD modeling for detail designing.
- Using a simulated annealing code for optimization we optimized the link lengths to minimize torque.
- We later scaled down the model for one person for ease of prototyping.

3.3. Preliminary Functional Design

We first made a hand drawn sketch of our conceptual design as seen in Fig. 2 to visualize the general placements and structure of things we needed. In order to make things easier we selected three recipes with varying levels of difficulty - Bhindi Masala, Pav Bhaji & Dosa. Based on the nature of the functions needed to make selected recipes, we selected basic components & mechanisms and generated a block diagram & finalised maximum dimensions.

The general design contained oil, water, dosa and solid ingredients dispenser that are used within the average Indian Household kitchen. A Robotic arm to replicate the functions of a human hand. A tool holder from where the robotic arm could access different tools

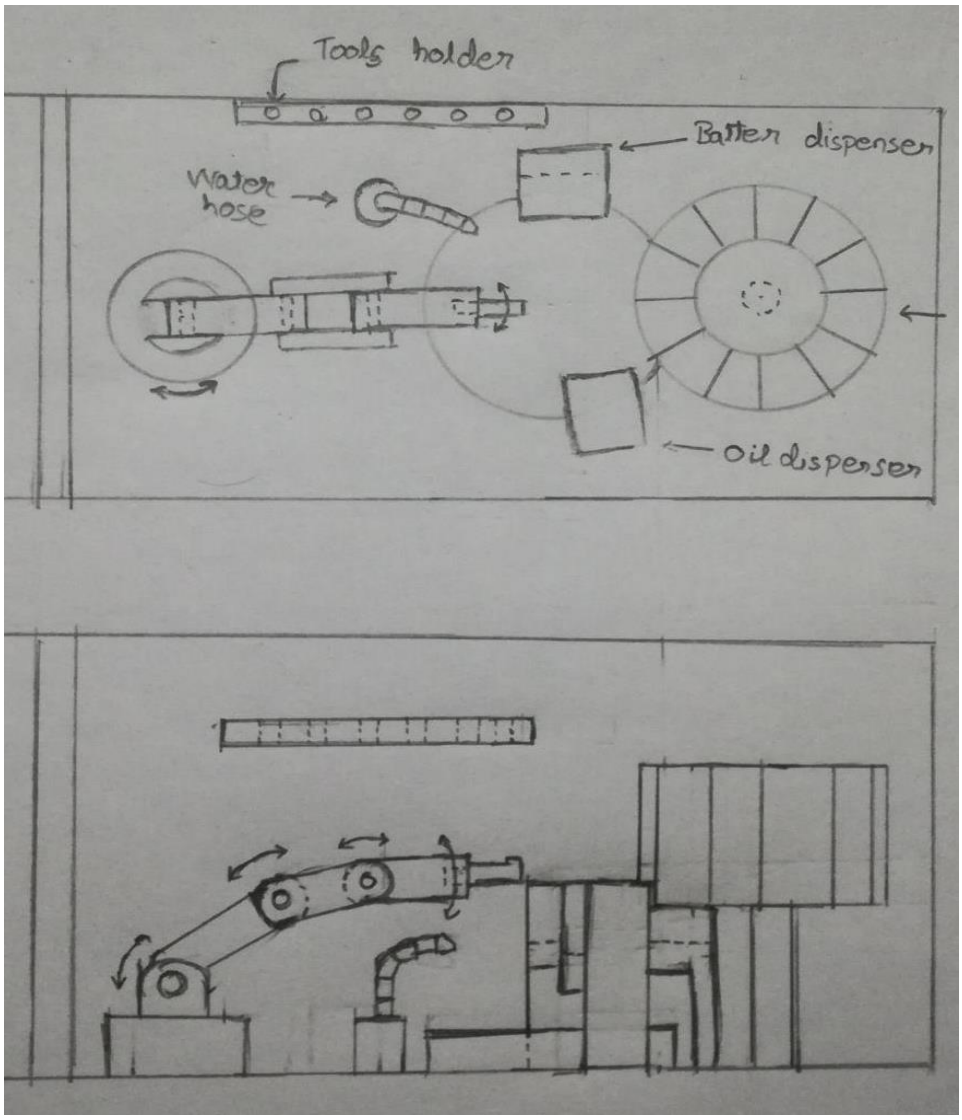

Fig. 2. Preliminnary Functional Design

3.4. Detail design

The system can be divided into two major parts: the robot arm and the solid dispenser. Smaller dispensers for liquids and semi liquids are also present. The arm is tasked with actually carrying out the cooking actions while the dispensers, with dispensing the ingredients in appropriate quantities at appropriate times. These are placed in fixed predetermined positions relative to an induction cooktop and tool rack.

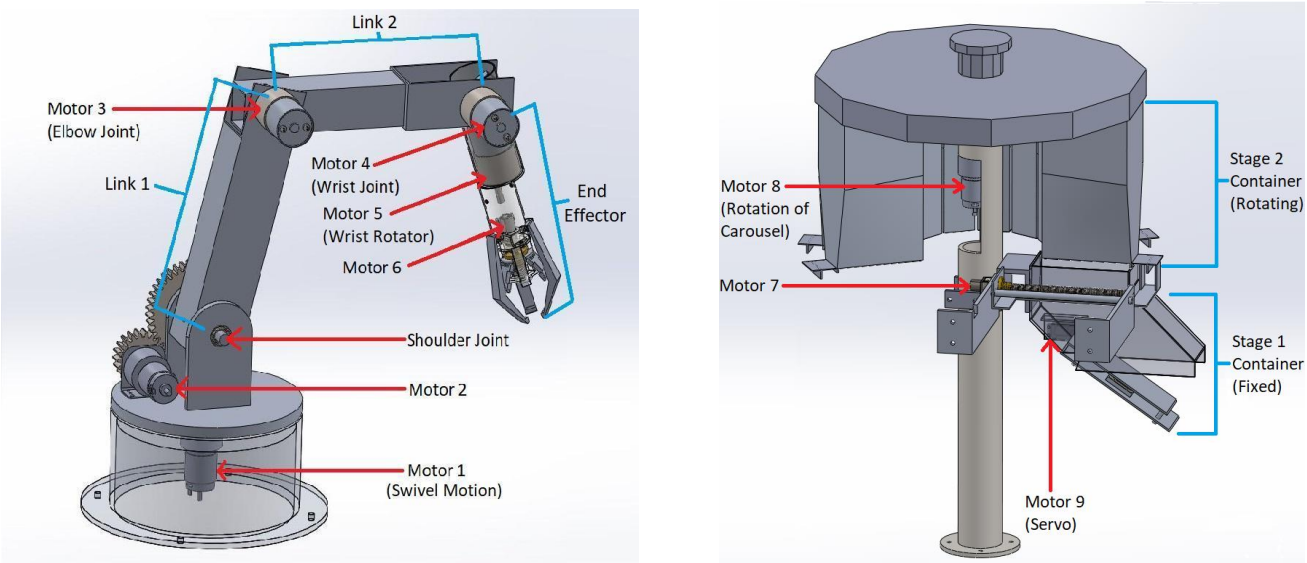

(a) (b)

Fig. 3. (a) Robot arm with important parts labeled (left); (b) Solid ingredient dispenser with important parts labeled (right)

A labeled diagram of both can be seen in Fig. 3 (a) & 3 (b) respectively. Dispensers are of two types: solid dispensers and liquid and semi-liquid dispensers. The specifications were decided based on the dishes being targeted and their quantity. Components are sized to serve 2 people and the maneuvers that the arm is expected to perform are chosen to cook the following 3 Indian dishes: “Bhindi Masala, Pav Bhaji, and Dosa”.

3.4.1. Robot Arm

Based on consideration of the required movements, the arm is designed with 5 rotary DOF (with an additional DOF for representing the position of the end effector).

The motor attached to the base (Motor 1) imparts a swivel motion to the arm. The other motors are at joints with positions corresponding to a human shoulder (Motor 2), elbow (Motor 3), and wrist (Motor 4). The end effector has an additional rotary degree of freedom about its axis (Motor 5) not present in a human, to optimize stirring action during the cooking.

These joints are sufficient for attaining the trajectories required for cooking the three recipes mentioned above, namely, mashing, stirring, and turning over ingredients in the pan (dosa in particular).

A three fingered claw is used as the end effector because the precision required in gripping is lower than that of a collet or lock and key mechanism. Specialized tools have also been designed, with handles optimized specifically for being gripped by the said claw.

3.4.1.1. Link Length Optimization

Lengths of individual links of the robot arm were chosen to minimize torque requirement at extreme positions of the arm. 2 Positions were chosen as shown in Fig. 4, as optimization for one position led to only trivial solutions. The method used for optimization was Simulated Annealing.

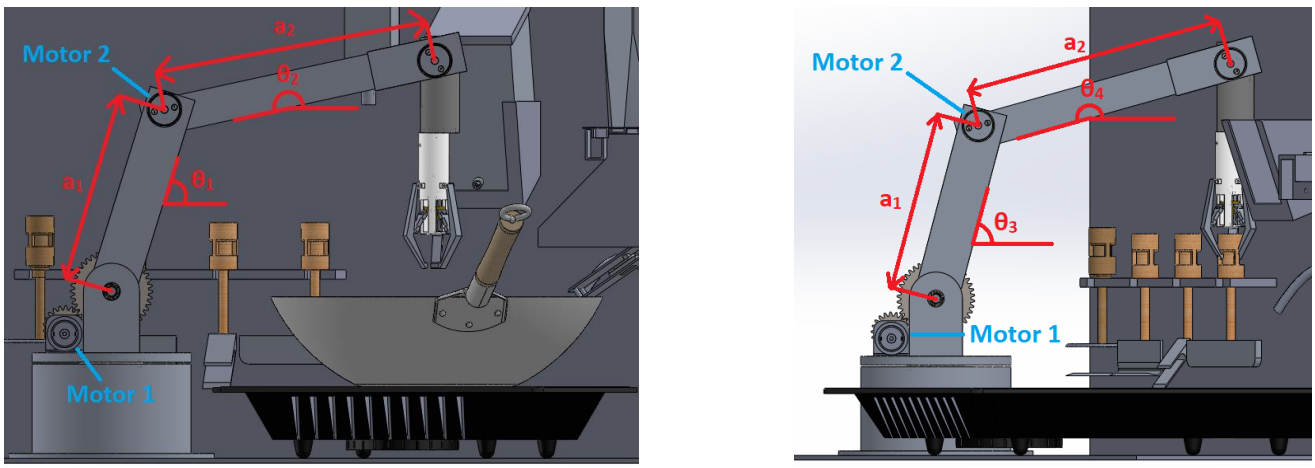

(a) (b)

Fig. 4. (a) Robot arm in position 1 (poised to act on the cooking vessel) (left); (b) Robot arm in position 2 (Poised to grab the furthest tool) (right)

The function being minimized is:

Max {$Torque_{11}$, $Torque_{12}$, $Torque_{21}$, $Torque_{22}$}

Where,

$$Torque_{11} = \frac{\lambda 1 * {a_1}^2 * cos\,(\theta_1)}{2} + M * a_1 * cos\,(\theta_1) + a_1 * cos\,(\theta_1) - 0.5 * a_2 * cos\,(\theta_2) * L2 * a_2 + (3 * M + E) * a_1 * cos\,(\theta_1) - a_2 * cos\,(\theta_2) \quad .....(1)$$

$$Torque_{12} = \frac{-\lambda_2 * a_2^2 * cos\,(\theta_2)}{2} - (3 * M + E) * a_2 * cos\,(\theta_2) \quad .....(2)$$

$$Torque_{21} = \frac{\lambda 1 * {a_1}^2 * cos\,(\theta_3)}{2} + M * a_1 * cos\,(\theta_3) + a_1 * cos\,(\theta_3) - 0.5 * a_2 * cos\,(\theta_4) * L2 * a_2 + (3 * M + E) * a_1 * cos\,(\theta_3) - a_2 * cos\,(\theta_4) \quad .....(3)$$

$$Torque_{22} = \frac{-\lambda_2 * a_2^2 * cos\,(\theta_4)}{2} - (3 * M + E) * a_2 * cos\,(\theta_4) \quad .....(4)$$

The 4 equations, of which the maximum is being chosen, represent the torque on motors 1 and 2 in positions 1 and 2 respectively.

Where,

$Torque_{ij}$ = torque at position i on joint j

λ_i=Linear Mass Density of Link i (i=1,2)

a_i=Length of Link i (i=1,2)

θ_i=Angle between the horizontal and link i while positioned above the cooking vessel (i=1,2)

θ_i=Angle between the horizontal and link i while positioned above the tool (i=3,4)

M=Mass of motors

E=Mass of End Effector Assembly

The equation consists of terms for the torque, along with a penalty term to disincentivize longer link lengths.

Subject to constraints:

$\left(a_1 * cos(\theta_1) - a_2 * cos\,(\theta_2)\right) < 28$ [Necessary Horizontal Span to reach the cooking vessel] …..(5)

$\left(a_1 * sin\,(\theta_3)\ - a_2 * sin\,(\theta_4)\right) < 28$ [Necessary Vertical Span to reach the tool] …..(6)

$\left(a_1 * cos\,(\theta_3)\ - a_2 * cos\,(\theta_4)\right) < 30$ [Necessary horizontal span to reach the tool] …..(7)

$0 < a_1 < 25$ [Limiting link length due to space constraints] …..(8)

$0 < a_2 < 25$ [Limiting link length due to space constraints] …..(9)

$30° < \theta_1 < 135°$ [Limiting range of angles to a reasonable interval] .....(10)

$160° < \theta_2 < 270°$ [Limiting range of angles to a reasonable interval] .....(11)

$30° < \theta_3 < 135°$ [Limiting range of angles to a reasonable interval] .....(12)

$90° < \theta_4 < 270°$ [Limiting range of angles to a reasonable interval] .....(13)

3.4.1.2. Torque Estimation

For the estimation of maximum torque, the arm is taken to be in the outstretched horizontal position [6,8,9]. A payload of 0.6 kg is assumed at the end, considering that the weight of the heaviest tool is roughly 0.2 kg and then multiplying by a safety factor of 3 to account for any additional forces.

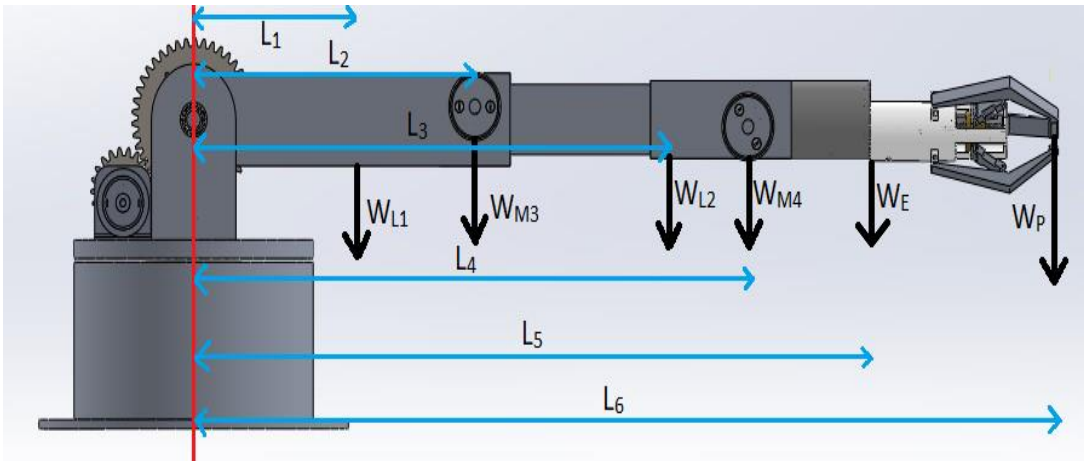

Fig. 5. Robot arm in a horizontally outstretched position

Based on Fig. 5:

$$\tau_{net}(Torque\ at\ shoulder\ joint) = W_{L1} * L_1 + W_{M3} * L_2 + W_{L2} * L_3 + W_{M4} * L_4 + W_E * L_5 + 9.81 * L_6 \quad .....(14)$$

$$\tau_1(Torque\ at\ elbow\ joint) = W_{L2} * (L_3 - L_2) + W_{M4} * (L_4 - L_2) + W_E * (L_5 - L_2) + 9.81 * (L_6 - L_2) \quad .....(15)$$

$$\tau_2(Torque\ at\ wrist\ joint) = W_E * (L_5 - L_4) + 9.81 * (L_6 - L_4) \quad .....(16)$$

Variables, their meaning and their values (Obtained from the SolidWorks Model) are tabulated in Table 1.

Table 1. Variables of the Torque Equation & their Values

Variable	Explanation	Value
L_1	Distance Between Shoulder Joint and Center of Mass of Link 1	09.19 cm
L_2	Distance Between Shoulder Joint and Center of Mass of Motor 3	20.00 cm
L_3	Distance Between Shoulder Joint and Center of Mass of Link 2	28.74 cm
L_4	Distance Between Shoulder Joint and Center of Mass of Motor 4	39.42 cm
L_5	Distance Between Shoulder Joint and Center of Mass of End Effector Assembly	48.29 cm
L_6	Distance Between Shoulder Joint and Assumed Payload	61.50 cm
W_{L1}	Weight of Link 1	0.93 N
W_{L2}	Weight of Link 2	0.70 N
W_{M3}	Weight of Motor 3	1.67 N
W_{M4}	Weight of Motor 4	1.67 N
W_E	Weight of End Effector	2.63 N
W_P	Weight of Payload	5.89 N

Substituting these values appropriately,

$$\tau_{net}(Torque\ at\ shoulder\ joint) = 616.89Ncm$$

$$\tau_1(Torque\ at\ elbow\ joint) = 357.22Ncm$$

$$\tau_2(Torque\ at\ wrist\ joint) = 239.93Ncm$$

3.4.2. Dispensers

Dispenser assemblies are tasked with the deployment of ingredients into the cooking vessel at appropriate times and in appropriate quantities. Based on the type of ingredient being dispensed, the dispenser may be of 3 types: Solid, Liquid, and Semi-Liquid Dispensers.

3.4.2.1. Solid Dispenser

The solid dispenser is a carousel-type two-stage mechanism with stage 2 containers arranged in a circle. The stage 1 container as seen in Fig. 8 is below this carousel closer to the pan.

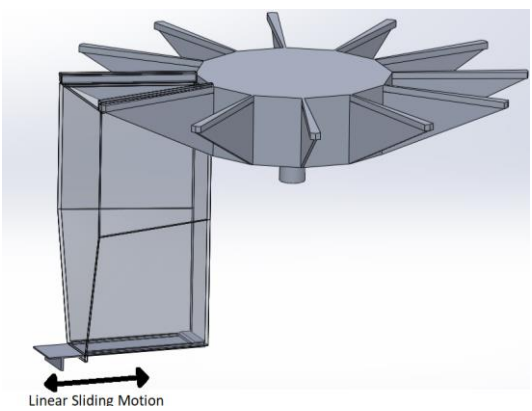

Fig. 6. CAD model of Stage 2 container

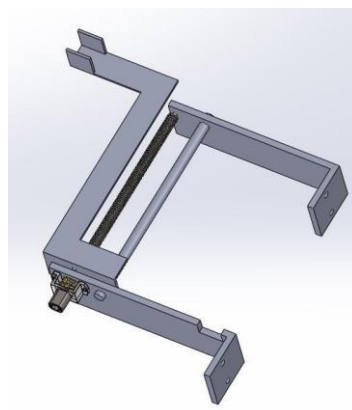

Fig. 7. CAD model of Stage 2 opener

Stage 2 contains macro ingredients & spices as required by the recipe as shown in Fig. 6. This stage is rotated by a 60 rpm DC motor (Motor 8). The angle of rotation is controlled by an encoder such that the positions of the containers are exactly above stage 1. Stage 2 has a lead screw opening mechanism for containers using a N20 motor (Motor 7) as shown in Fig. 7, to let ingredients fall into stage 1 where it is weighed using a weight sensor. This gave us the advantage of using only one mechanism for all the containers in Stage 2.

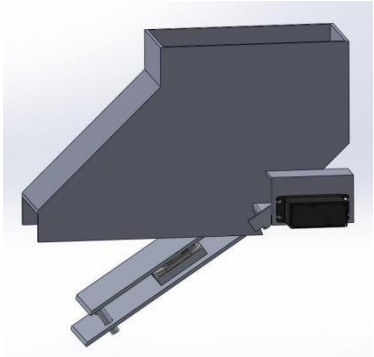

Fig. 8. CAD model of Stage 1 container

Stage 1 has an opening mechanism using a servo motor that lets the weighed ingredients slide down in the pan. It also has the said weight sensor to receive the right amount of ingredients from stage 2.

Macro ingredients containers are expected to be refilled before initiation of each cooking cycle, depending on the recipe.

3.4.2.2. Liquid Dispenser and Semi-Liquid Dispenser

The system contains one liquid dispenser and one semi-liquid dispenser. The liquid dispenser is for oil & the latter is for the Dosa Batter as shown in Fig. 9 & Fig. 10 respectively. For water, a hose is used which will be directly connected to a water supply. The dimension of the batter dispenser is decided to hold enough quantity for a meal of two people.

The dispensing action of all these fluids are controlled using a Solenoid Valve 1/2" DC 3.6-6V. The dispensing action is a gravity-based system for oil and batter.

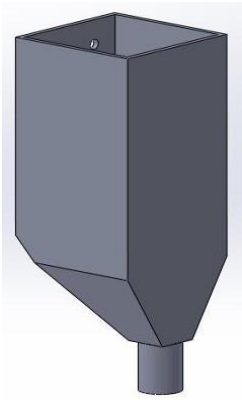

Fig. 9. CAD model of Oil dispenser

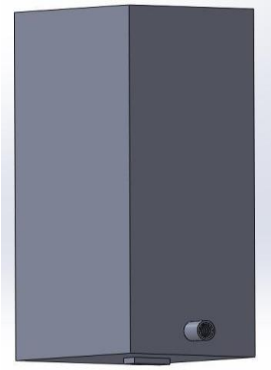

Fig. 10. CAD model of Batter dispenser

3.4.2.3. Actuators and Electronics

Actuators going to be used in the system include many motors and Solenoid Valves. Solenoid valve decided is Solenoid Valve 1/2" DC 3.6-6V Water Control Electric Pulse (Bistable)

The summary of all motors is tabulated in Table 2.

Table 2. List of Motors used in the model

Motor Position	Model	Specifications	Justification
Motor 1	Orange 12V Brushed DC	10 RPM, 472.6 Ncm	Slow Speed for precision
Motor 2	Orange 12V Brushed DC	10 RPM, 472.6 Ncm	High Torque Required
Motor 3	Orange 12V Brushed DC	10 RPM, 472.6 Ncm	High Torque Required
Motor 4	Orange 12V Brushed DC	10 RPM, 328.3 Ncm	High Torque Required
Motor 5	Orange 12V Brushed DC	60 RPM, 157.6 Ncm	Medium Speed to retain precision with relatively lower torque requirement
Motor 6	N20 12V Micro Brushed DC	60 RPM, 9.5 Ncm	Compact size, Lower torque requirement
Motor 7	N20 12V Micro Brushed DC	600 RPM, 1.8 Ncm	Compact size, Lower torque requirement
Motor 8	Orange 12V Brushed DC	60 RPM, 157.6 Ncm	Medium Speed to retain precision with relatively lower torque requirement
Motor 9	TowerPro MG995 Plastic Gear Servo Motor	180º, approx. 19 Ncm, 50-62.5 RPM	Low Load, Easy to control

The control system for this includes an Arduino Mega 2560 Rev3 microcontroller which forms a feedback loop system using the inputs given by different encoders and sensors. The motors being considered are compatible with OE-28 Hall Effect Two Channel Magnetic Encoder which is an incremental encoder.

To measure the weight of ingredients as mentioned before, a 50kg Half-bridge Experiments Body Scale Load Cell Sensor is going to be used.

4. Analysis

Analysis is carried out using Ansys [10] to verify the structural and thermal integrity of all materials and components used in the design.

4.1. Structural Analysis

Static Structural analysis of the links with material as aluminum was carried out using ANSYS. Since the deformation of the link was very less & also in order to reduce the weight of the arm which would further reduce torque on the motor, geometrical changes to the cross-section were done & analyzed. The first variant had a cut through one of its sections whereas the second variant was a truss like structure as shown in Fig. 11 & Fig. 12. These changes did not satisfactorily reduce weight thus for the material of the links other non-metallic materials were also considered. Precedent for usage of polyamide (Nylon 66) as an alternative was found in the analysis by Kaitwanidvilai et al [11]. On conducting the analysis for Nylon, a satisfactory value for weight, deformation and stress was achieved but after further considerations for prototyping purpose Nylon was rejected as it wasn't an economical option. Thus, we continued with aluminum but reduced the cross-section thickness to 1mm. Upon analysis, the weight reduction was better than all aluminum designs & deformation results were satisfactory as shown.

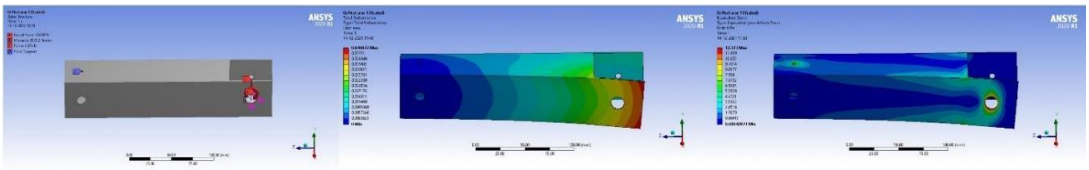

Design 1

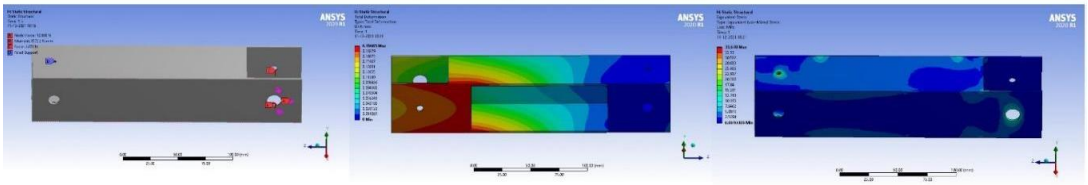

Design 2

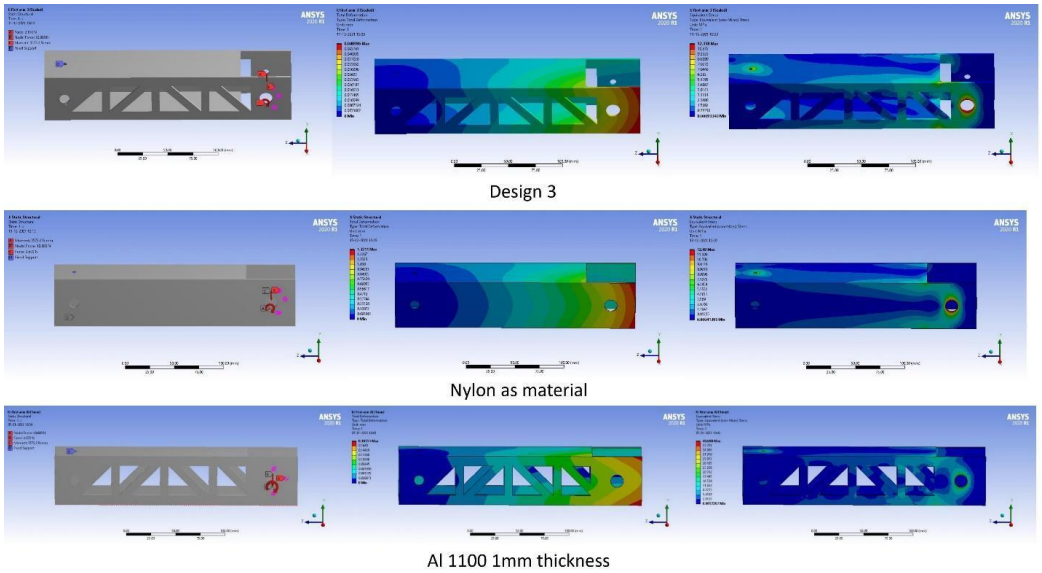

Fig. 11. Structural Analysis Results for iterations of First Link of the Robot Arm

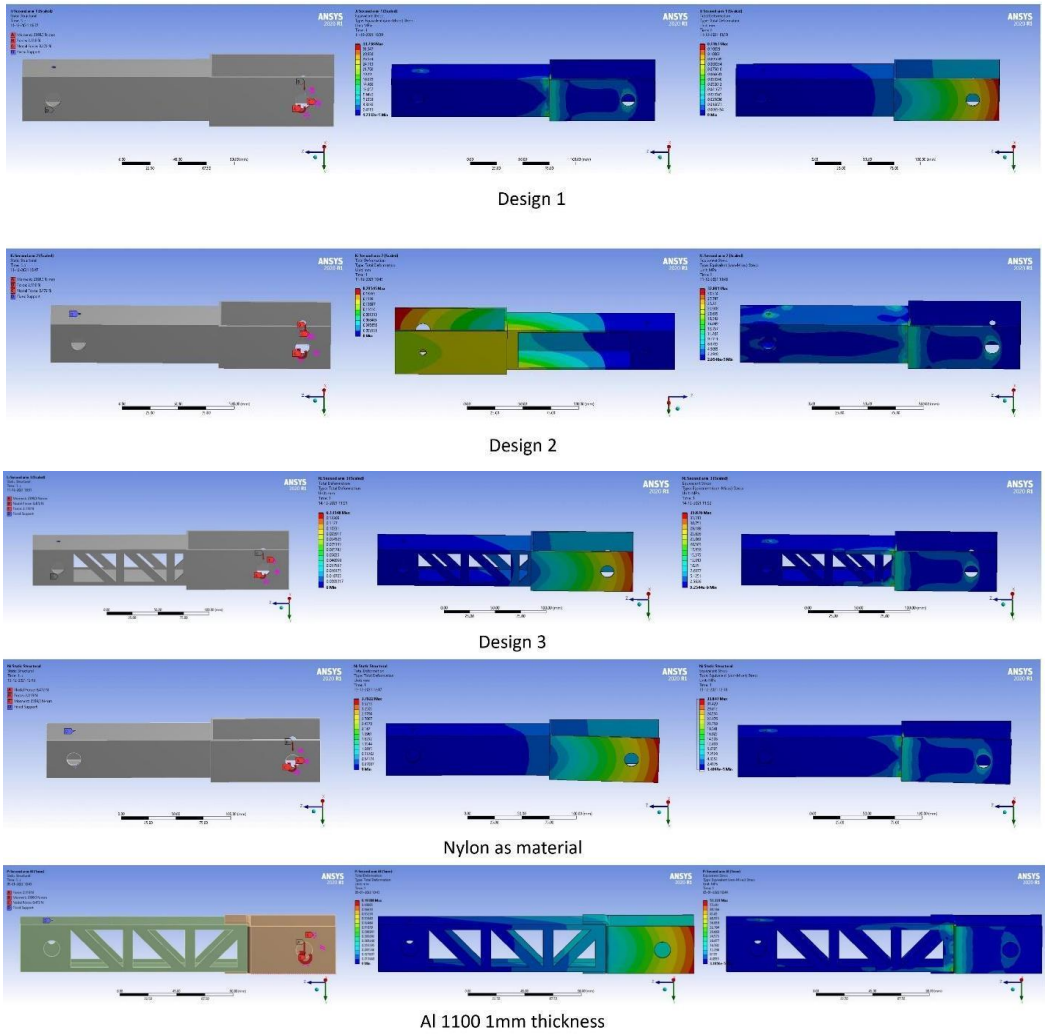

Fig. 12. Structural Analysis Results for iterations of Second Link of the Robot Arm

4.2 Thermal Analysis

In order to make sure that the heat from the induction cooktop does not affect the working of the motors by heat transfer, transient thermal analysis is done. Transient thermal analysis is chosen as the operation here varies with time & is not constant. A constant heat flux equivalent to the power corresponding to the maximum temperature of the cooktop is applied throughout the whole analysis. The ambient temperature of the surrounding area was taken as 30°C. The initial temperature of the setup was equal to the ambient temperature. Since radiation and convection will work towards decreasing the temperature of the whole system, only conduction was considered for the worst-case scenario and to simplify the analysis. Appropriate materials were assigned to each component. The result of the analysis is as shown in Fig. 13. Due to the material of the stirrer handle being nylon with low thermal conductivity, heat is prevented from going further thus reducing the effect of heat transfer in the claw & thereby motors attached to it.

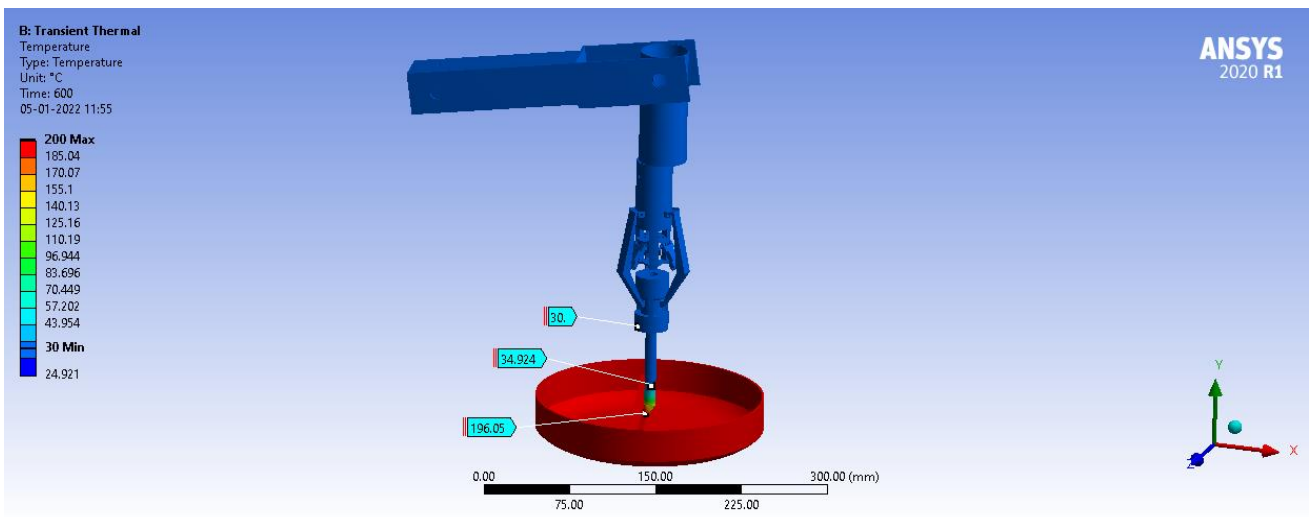

Fig. 13. Thermal Analysis Result of the model

4.2.1. Validation of Thermal Analysis

The methodology for this was validated by doing a similar experiment, an aluminum C-block and a strip of Delrin were used in the setup as seen in Fig. 14 & Fig. 16 (a). They were kept on a hot plate whose max power output is 500W. Readings for temperature near the separation of aluminum C-block and Delrin plate and time were recorded for every 10 °C rise of hot plate.

Fig. 14. Setup for Thermal Analysis Validation

The thermometer used for measuring the hot plate temperature has a range from 0 °C to 360 °C. The thermometer used for measuring the separation temperature ranges from 0 °C to 150 °C. The data recorded is seen in Table 3 and Fig. 15.

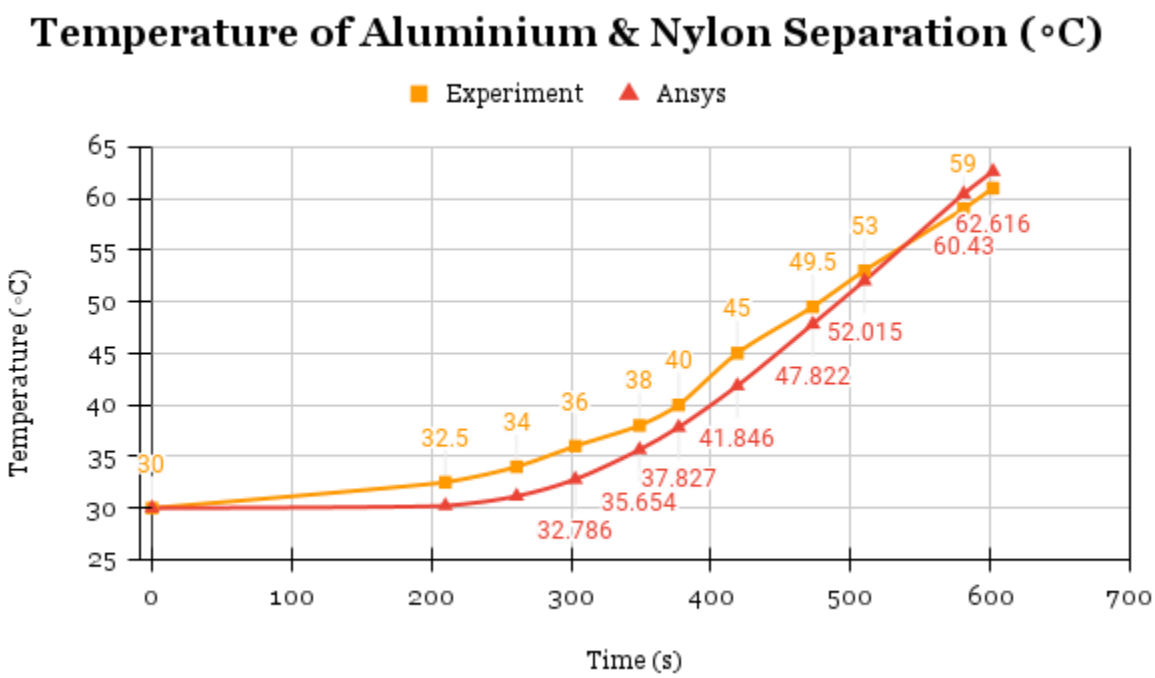

Fig. 15. Graph for Experimental vs Ansys observations for Thermal Analysis Validation

Table 3. Experimental observations for Thermal Analysis Validation

Temperature of the Hot Plate (◦C)	Time (s)	Temperature at the separation of Aluminum & Delrin (°C)-Experiment	Temperature at separation of Aluminum & Delrin (°C)-Ansys	% Error = $\frac{(Ansys-Experiment)*100}{Experiment}$
30	0	30	30	0
40	210	32.5	30.218	-7.021538462
50	261	34	31.149	-8.385294118
60	303	36	32.786	-8.927777778
70	349	38	35.654	-6.173684211
80	377	40	37.827	-5.4325
90	419	45	41.846	-7.008888889
100	473	49.5	47.822	-3.38989899
110	510	53	52.015	-1.858490566
120	581	59	60.43	2.423728814
125	600	61	62.616	2.649180328

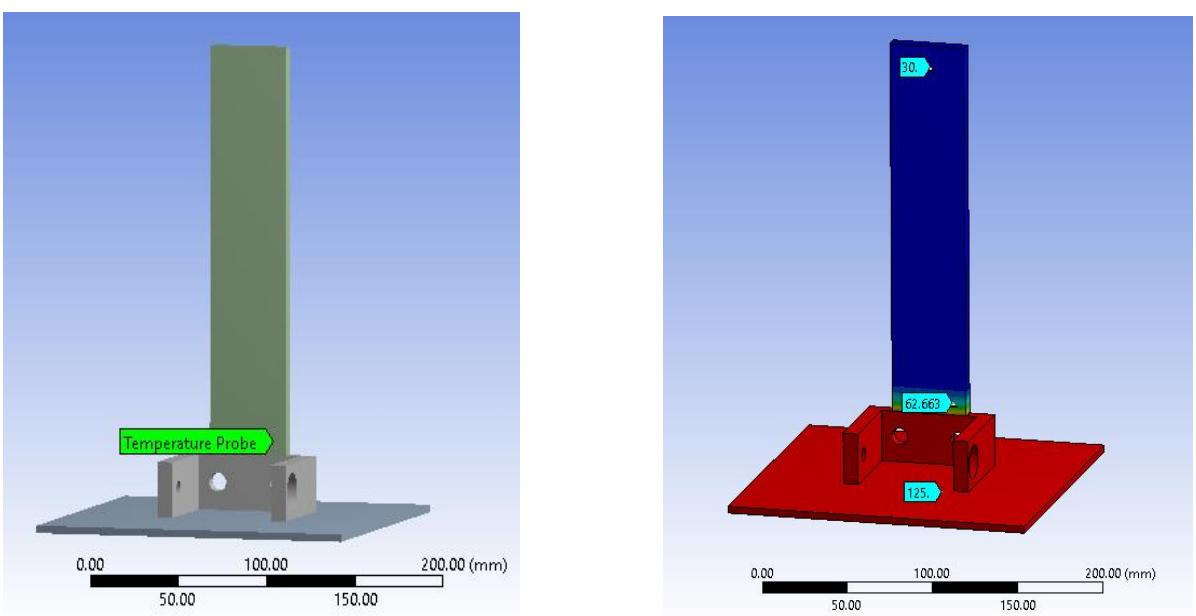

(a) (b)

Fig. 16. (a) CAD Model of the Validation Setup (left); (b) Ansys Results of Thermal Analysis of the Validation Setup (right)

4.3. Simulation & Kinematic Analysis

A simulation of the robot arm was carried out using Cyberbotics WeBots™ for Windows to aid in the development of the control algorithm and the trajectory characteristics.

The algorithms are coded in Python and designed to allow the endpoint of the arm to attain positions corresponding to input coordinates. Interpolation between these points is carried out in joint space, independently for each joint based on its current and target angle, the latter of which is to be obtained by performing inverse kinematics. To ensure conformity to specific cartesian space curves, the number of points between the initial and final position can be increased.

4.3.1. Kinematic Analysis

Inverse kinematics refers to the conversion of data about the position of the end effector from the global cartesian space to the joint space; forward kinematics being the other way around [12]. Inverse kinematics was needed to translate between known information; i.e., the coordinates of the end effector must reach in order to carry out a certain cooking action and the unknown joint angles that would correspond to said coordinates. The Denavit-Hartenberg Representation [13] is the popular choice of representation of an inverse kinematic model for a robot manipulator [14-17]. However, the current robot model, due to its simplicity, can be conveniently modeled using explicit equations pertaining to its geometry. These are explained below.

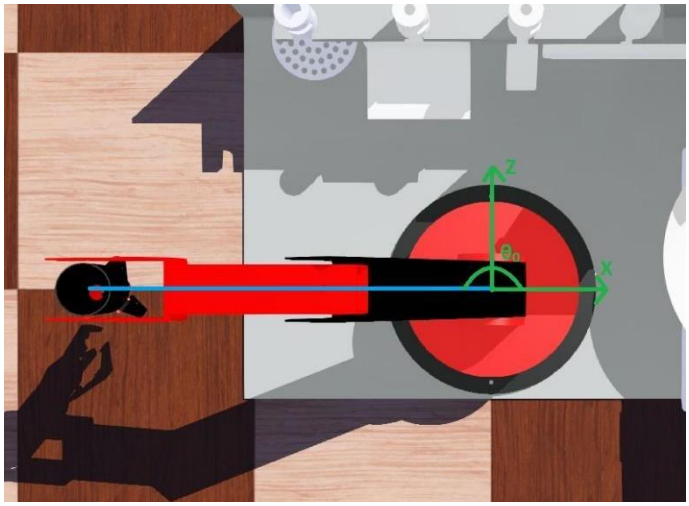

Fig. 17. Angle system for base

By considering the plane of the linkages to be movable about the vertical axis through the origin, analysis can be simplified.

First, based on coordinates (x,y,z) of the end effector, angle θ_0 of the plane from Fig. 17 is:

$$\theta_0 = arctan\left(\frac{z}{x}\right) \qquad where\ x > 0 \qquad .....(17)$$

$$\theta_0 = \pi - arctan\left(\frac{z}{x}\right) \qquad where\ x < 0 \qquad .....(18)$$

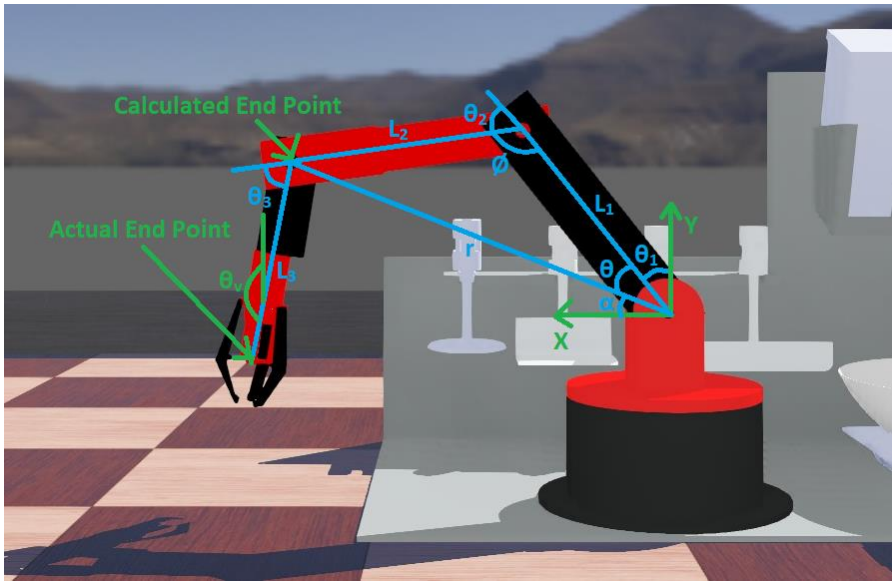

Fig. 18. Angle system for links in the rotating plane

Now, shifting from the global frame to the rotating vertical plane frame,

$$X_{act} = (x^2+z^2)^{0.5} \qquad .....(19)$$

However, the arm possesses 3 DOF (excluding the wrist rotation and claw position) in this plane, leaving 1 DOF redundant since points in a plane possess only 2 DOF. Hence, an additional constraint for the arm position must be provided, to arrive at a finite number of solutions. This is chosen to be θ_V i.e., the angle between link 3 and the vertical, which will be known for the various actions the arm will carry out.

Additionally, to accommodate the new angle constraint, the actual end point is changed to the calculated end point as shown in Fig. 18.

Hence, for this point,

$$X = X_{act} + L_3 * cos\left(\frac{3\pi}{2} - \theta_V\right) \qquad .....(20)$$

$$Y = Y_{act} + L_3 * sin\left(\frac{3\pi}{2} - \theta_V\right) \qquad .....(21)$$

$$\alpha = arctan\left(\frac{Y}{X}\right) \qquad where\ X > 0$$

$$\alpha = \pi + arctan\left(\frac{Y}{X}\right) \qquad where\ X < 0 \qquad .....(22)$$

$$\theta = arccos\left(\frac{(L_1^2+r^2-L_2^2)}{2L_1 r}\right) \quad .....(23)$$

$$\phi = arccos\left(\frac{(L_1^2+L_2^2-r^2)}{2L_1 L_2}\right) \quad .....(24)$$

Therefore, θ_1, θ_2 and θ_3:

$$\theta_1 = \left(\frac{\pi}{2}\right) - (\theta + \alpha) \quad .....(25)$$

$$\theta_2 = \pi - \phi \quad .....(26)$$

$$\theta_3 = \theta_v - \theta_1 - \theta_2 \quad .....(27)$$

Where,

Li=Length of Link i

Xact= Abscissa of actual endpoint of the arm acc to the rotating plane axes

Yact= Ordinate of actual endpoint of the arm acc to the rotating plane axes

X= Abscissa of endpoint of the link 2 (calc endpoint) acc to the rotating plane axes

Y= Ordinate of endpoint of the link 2 (calc endpoint) acc to the rotating plane axes

4.3.2. Angular Velocity Interpolation Function

The velocity function is designed so as to create a smooth curve between the start and end points, avoiding sudden accelerations and decelerations considering the proposition by P. Gandhi et al [18]. Feedback is available in terms of time elapsed and current angle of the joint.

Hence, in the Position-Velocity Space, a squared trigonometric function is used, considering that all its derivatives are continuous. A temporary, linear time dependent term is added to the function to initiate velocity in a smooth manner; because at position=0, velocity must be 0, making it impossible for it to change with respect to time.

$$If\left(\frac{TargetAngle-CurrentAngle}{TargetAngle-StartAngle} > 0.8\right):$$

$$v = c_1 * (MaxSpeed) * sgn(TargetAngle - CurrentAngle) * sin^2\left(\pi\frac{CurrentAngle-StartAngle}{TargetAngle-StartAngle}\right) + c_2 * sgn(TargetAngle - CurrentAngle) * T \quad .....(28)$$

$$If\left(\frac{TargetAngle-CurrentAngle}{TargetAngle-StartAngle} \leq 0.8\right):$$

$$v = c_1 * (MaxSpeed) * sgn(TargetAngle - CurrentAngle) * sin^2\left(\pi\frac{CurrentAngle-StartAngle}{TargetAngle-StartAngle}\right)$$

.....(29)

Where,

c1 and c2 are arbitrary scaling constants.

5. Fabrication and Testing

5.1 Manufacturing Methodology

A variety of manufacturing and fabrication techniques had to be applied to build the necessary components of the robot.

These include:

1. Turning
2. Milling
3. WaterJet Cutting
4. Bending
5. Welding
6. 3D Printing

First the process began with making 2D sheets for each component that had to be manufactured as see in the Fig. 19 and were taken to manufacturers for validation. After incorporating the changes suggested by them, some in design and some in creating 2D sheets the actual manufacturing process began.

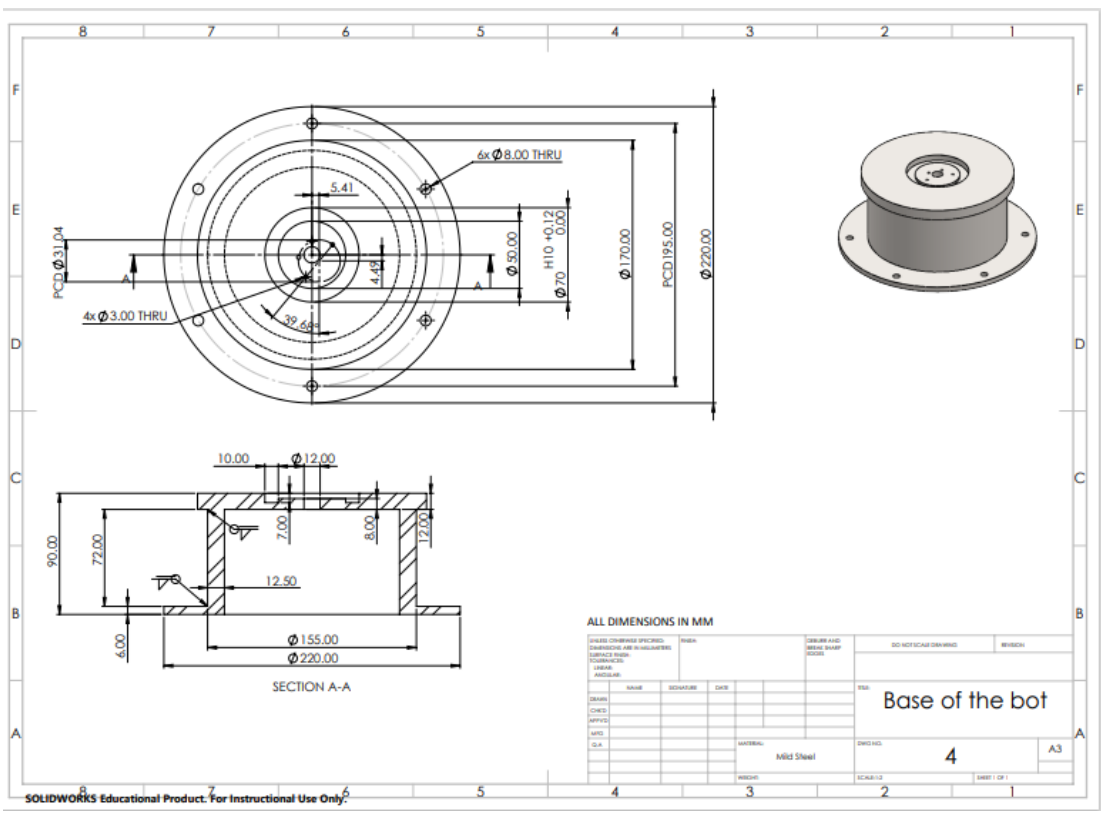

Fig. 19. Example of 2D designs showed to vendors

Lathe machining was preferred over milling for circular parts like the manipulator base, rotating base, motor house and motor couplers.

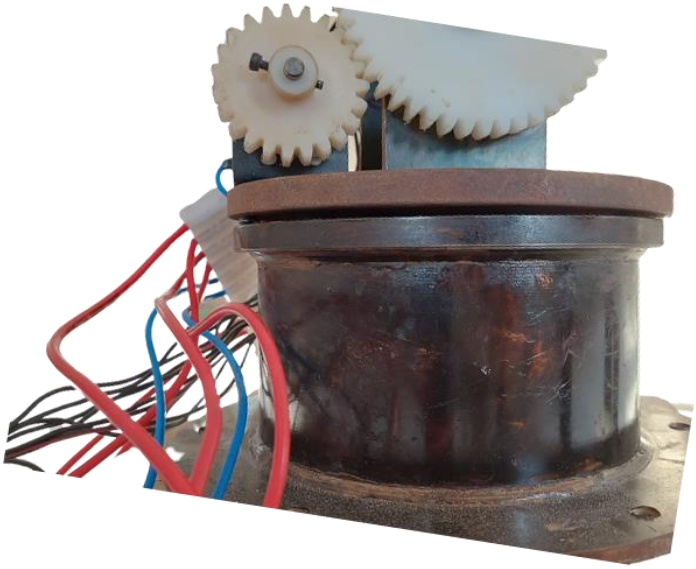

Fig. 20. Actual Base of the Manipulator

Welding had to be used for the base. It is worth noting that this process contributed to our knowledge as design engineers by helping us learn that designing a male-female fit into sections that need to be welded together greatly increases the ease and quality of welding. We can see the welded base of the arm in Fig. 20.

For intricate and unusual geometrical parts like fingers of the claw and sheet metals as seen in Fig. 21. We first decided to go for a waterjet. After getting some of these parts manufactured, based on recommendations by the manufacturer, laser cutting was prioritized for the remaining parts as it was cheaper and more precise.

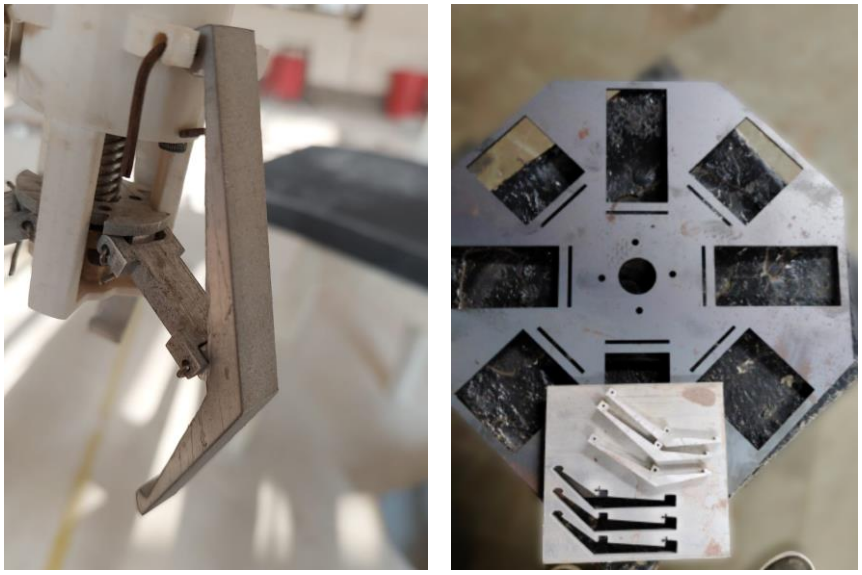

Fig. 21. (a) Fingers of the Claw after Waterjet Cutting (left); (b) Dispense Hanger after Laserjet Cutting (right)

Certain parts like the end attachment for Link 2 (Fig. 22) were manufactured by applying folds through a bending process to an appropriately shaped planar aluminum sheet.

The parts which didn't need much strength and were too complex to be made using normal processes were fabricated additively using 3D Printing, thus saving us some time and cost. Use of this manufacturing technique also taught us about the design features required for effective 3D printing such as support structures and about the types of geometries that can and cannot be 3D printed. Simple operations like drilling, cutting and some turning were carried out within the college on our own to minimise cost.

Fig. 22. First & Second Manipulator Link

5.2 Electronics

After manufacturing we proceeded with the development of the electronics & Control system. The first step was to find a suitable ac to dc converter for which we chose SMPS. The selection of SMPS was done based on the total current & voltage required by all actuators & sensors in the system which came out to be 20A when all motors work simultaneously at max load, also adding an FOS of 1.5. Since the motors needed 12V supply the SMPS we selected has 12V DC output. The microcontroller used by us (Arduino Mega) needs a 5V supply, so we added a Buck circuit using IC 7805 voltage regulator which took the 12V from the SMPS & regulated it to 5V which is safe for the Arduino. The whole circuit can be seen in Fig. 23.

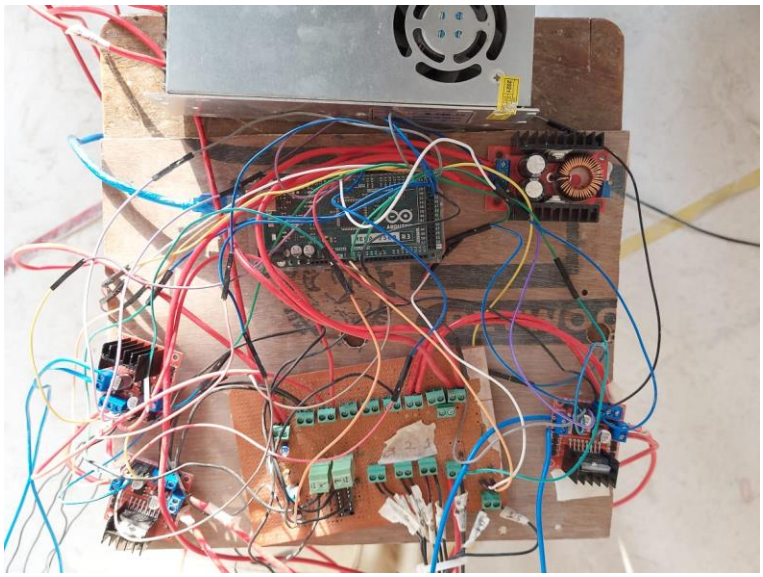

Fig. 23. Complete electronic circuit

The DC motors are driven by L298N motor drivers Fig. 24 which upon receiving input from the arduino, amplify the voltage to run the motors.

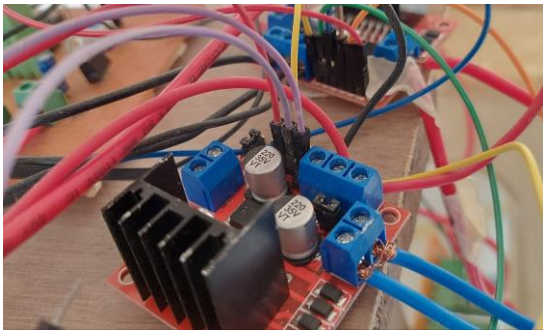

Fig. 24. Motor Driver

Arguably the most important part in the electronics domain was the selection and configuration of sensors. Based on certain calculations, it was found that an accuracy and resolution of 1 degree was required at each joint. Among the sensors with this required accuracy, a 10 turn precision potentiometer Fig. 25 (a) was the only absolute measurement device that was within our budget. However, since it could rotate through 10 turns and our design could only make use of 1 turn, any voltage supplied to the pot effectively became 1/10th for sensing purposes. Hence each turn had a span of merely 0.5V making a 5 or even 12V supply infeasible due to the arduino ADC which was limiting our resolution to nearly 4 degrees at 5V and 2 degrees at 12V. To resolve this issue, a special boost circuit (Fig. 25 (b)) was added to supply 50V to the potentiometer, giving a resolution of 0.4 degrees and it was mechanically configured so as to rotate through 270 degrees only by setting the voltage at 0 degrees as 2.5V. This serves to prevent the Arduino from receiving >5V which may damage it.

Of the 4 joints, 3 are controlled using these potentiometers. The remaining one is controlled using a hall effect incremental encoder due to space constraints in the design.

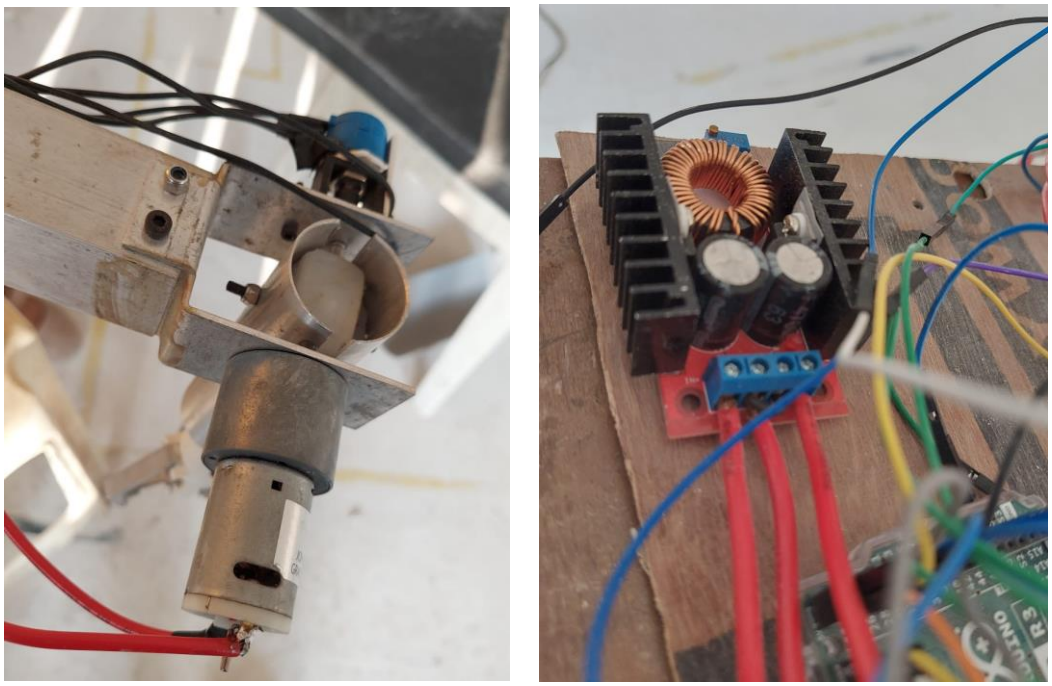

Fig. 25. (a) Potentiometer assembly (left); (b) Boost circuit (right)

5.3 The Code

The code written for the simulation had to be converted to be fit for use through the Arduino IDE for practical usage, beginning with converting the Python instructions to C++ and Java. The underlying logic mostly remained unchanged with the exception of the velocity control. In the software, the joint velocities could be controlled directly whereas using the Arduino, only the voltage supplied to the motors is within our control. However, the relationship between the two is non linear (load acts as an additional pseudo-variable and is a function of joint angles) and complex, requiring us to make several changes to the trajectory function to allow it to run correctly.

An offset and multiplicative factor also had to be added to the sensor reads, obtained through linear regression, to eliminate calibration errors. The readings used for calibration and their scatter plot is shown in Table 4 and Fig 26 respectively

Table 4. Experimental observations for Thermal Analysis Validation

Joint 1 (Angles in degrees)		Joint 2 (Angles in degrees)		Joint 3 (Angles in degrees)	
X (Actual Angle)	Y (Sensed Angle)	X (Actual Angle)	Y (Sensed Angle)	X (Actual Angle)	Y (Sensed Angle)
10	9	10	20	10	23
20	18	20	30	20	34
30	29	30	40	30	41
40	39	40	52	40	52
50	49	50	62	50	60
60	59	60	72	60	70

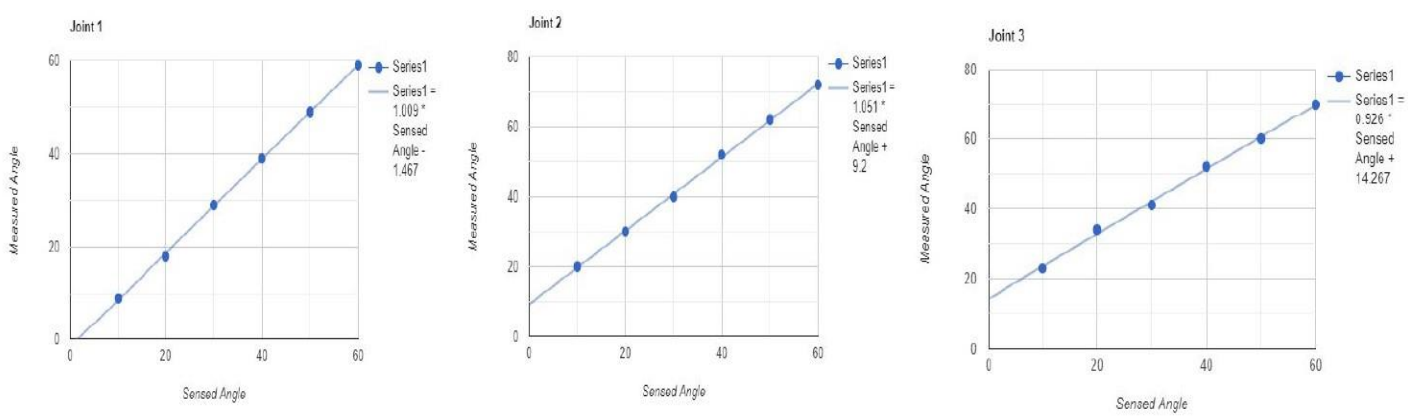

Fig. 26. (a) Scatter Plot for Joint 1; (b) Scatter Plot for Joint 2; (b) Scatter Plot for Joint 3

5.4 Testing

During the testing phase we first started with testing the amount of precision that we were getting from the potentiometers. Through some trials and calculations we concluded that a 50V supply to the potentiometer will provide us with a resolution of 0.4 degrees. Then we built and tested the power circuit before moving on to testing of the robotic arm assembly as a whole. Although we already had a final code ready, we didn't test it directly for safety reasons. Capitalising on the modularity of our code, which was a direct result of our design choices while developing the code, we tested one function at a time. Once one was verified, the subsequent functions were tested one at a time, as independently as possible, making the debugging process significantly faster.

While testing the mechanical soundness of the design, we came to know that there is approximately 40 degrees of cumulative play in the joints due to the motors and, primarily, manufacturing defects. But due to the error correction provision in our code the final error comes down to 5 degrees overall. After doing all these we finally tested our Inverse Kinematic function upon whose success we started hardcoding different processes for it to perform. As of now from the 6DOF, 5DOF are working completely. The wrist rotation motion of the claw is currently restricted due to unavailability of a slip ring to avoid entangling of wire inside.

6. Results & Discussion

6.1. Results & Conclusion

In this study, an automatic cooking system was designed with a 6 DOF robotic arm driven by brushed DC motors (with encoders), a rotating macro-ingredient dispenser assembly, and some other special dispensers. The robotic arm was analyzed for its structural strength. Thermal analysis is also carried out to ensure that there is no overheating of motors and temperature of materials is always below or within their service temperature. This analysis has been augmented by running kinematic and dynamic simulations of the system using softwares like Cyberbotics & WeBots. This allowed us for research into optimizing the trajectory of the arm and estimating power consumption. A physical working model of the system is also under development where the manipulator has been successfully tested. It can be seen in Fig. 27.

Practical development of this prototype revealed certain merits and shortcomings in the design. First, the specific potentiometers used have high resolution and moderately high repeatability. This was concluded based on the fact that any errors were reducible to +-1° simply by applying linear regression between expected and measured values. Additionally, the viability of inexpensive brushed DC Motors for this application was verified, the only limitations being a relatively high response time and the non-linear nature of voltage based velocity control. The payload capacity was tested to be at least 42.7 kg-cm at the first joint. The project also helped highlight the importance of the philosophy of “Designing for Assembly”.

Overall this setup can be considered feasible for medium precision applications like cooking in terms of the purview defined in this report.

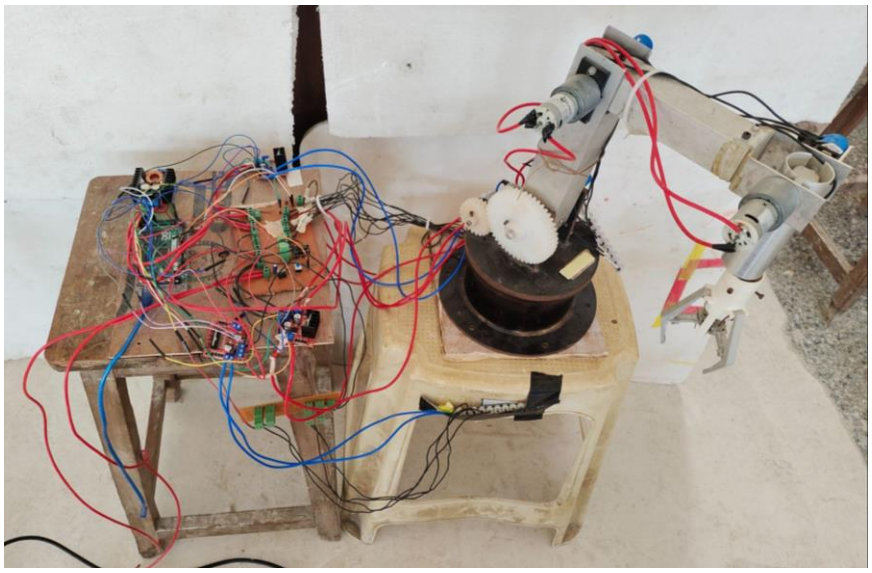

Fig. 27. Final Manufactured Robot Arm

It is hoped that this project will spur more research into the development of other such systems, overcoming some of its limitations while keeping the associated costs low.

6.2. Future Scope

This prototype design can be developed into a commercially viable automatic cooking system. It can further be improved in terms of mechanical design as well as in terms of its control system by integrating sensors like cameras for image processing, infrared cameras for remote temperature sensing, torque sensor, etc. Artificial intelligence & Machine learning can also be used to include more & more recipes or directly read a recipe from the internet [19]. The system can also be used remotely by leveraging IOT & using a mobile application [20]. Special dispensers for dispensing spices and seasoning with an auger style mechanism can be incorporated for higher precision.

7. References

[1] Blöcher, K., & Alt, R. (2021). AI and robotics in the European restaurant sector: Assessing potentials for process innovation in a high-contact service industry. Electronic Markets, 31(3), 529-551.

[2] Zemke, D. M. V., Tang, J., Raab, C., & Kim, J. (2020). How to build a better robot... for quick-service restaurants. Journal of Hospitality & Tourism Research, 44(8), 1235-1269.

[3] Li, B., Chen, Y., Deng, Z., & Xu, W. (2011). Conceptual design and analysis of the 2T1R mechanism for a cooking robot. Robotics and Autonomous Systems, 59(2), 74-83.

[4] Moran, M. E. (2007). Evolution of robotic arms. Journal of robotic surgery, 1(2), 103-111.

[5] Wallén, J. (2008). The history of the industrial robot. Linköping University Electronic Press.

[6] Noh, D., Liu, Y., Rafeedi, F., Nam, H., Gillespie, K., Yi, J. S., ... & Hong, D. (2020, June). Minimal Degree of Freedom Dual-Arm Manipulation Platform with Coupling Body Joint for Diverse Cooking Tasks. In 2020 17th International Conference on Ubiquitous Robots (UR) (pp. 225-232). IEEE.

[7] Kirkpatrick, S., Gelatt Jr, C. D., & Vecchi, M. P. (1983). Optimization by simulated annealing. science, 220(4598), 671-680.

[8] Kafuko, M., Singh, I., & Wanyama, T. (2015). Design of a Robotic Arm for Teaching Integrated Design. Proceedings of the Canadian Engineering Education Association (CEEA).

[9] Yue, H., Miao, J., Zhang, J., Fan, C., & Xu, D. (2021). Simulation for senior undergraduate education of robot engineering based on Webots. Computer Applications in Engineering Education, 29(5), 1176-1190.

[10] Kohnke, P. C. (1982). Ansys. In Finite Element Systems (pp. 19-25). Springer, Berlin, Heidelberg.

[11] Kaitwanidvilai, S., Buthgate, S., Aoyama, H., & Konghuayrob, P. (2020). Robot Arm Structure Design Using Polyamide Evaluated by Finite Element Analysis. Sensors and Materials, 32(2), 487-497.

[12] Kucuk, S., & Bingul, Z. (2006). Robot kinematics: Forward and inverse kinematics. INTECH Open Access Publisher.

[13] Denavit, J., & Hartenberg, R. S. (1955). A kinematic notation for lower-pair mechanisms based on matrices.

[14] Deshpande, V., & George, P. M. (2014). Kinematic modelling and analysis of 5 DOF robotic arm. International Journal of Robotics Research and Development (IJRRD), 4(2), 17-24.

[15] Xu, D., Calderon, C. A. A., Gan, J. Q., Hu, H., & Tan, M. (2005). An analysis of the inverse kinematics for a 5-DOF manipulator. International Journal of Automation and Computing, 2(2), 114-124.

[16] Tsumaki, Y., Kotera, S., Nenchev, D. N., & Uchiyama, M. (1997, April). Singularity-consistent inverse kinematics of a 6-DOF manipulator with a non-spherical wrist. In Proceedings of International Conference on Robotics and Automation (Vol. 4, pp. 2980-2985). IEEE.

[17] Nie, L., & Huang, Q. (2012, December). Inverse kinematics for 6-DOF manipulator by the method of sequential retrieval. In the Proceedings of the International Conference on Mechanical Engineering and Material Science, China (pp. 255-258).

[18] Gandhi, P., Deshmukh, S., Ramtekkar, R., Bhole, K., & Baraki, A. (2013). " ON-AXIS" LINEAR FOCUSED SPOT SCANNING MICROSTEREOLITHOGRAPHY SYSTEM: OPTOMECHATRONIC DESIGN, ANALYSIS AND DEVELOPMENT. Journal of Advanced Manufacturing Systems, 12(01), 43-68.

[19] Bollini, M., Tellex, S., Thompson, T., Roy, N., & Rus, D. (2013). Interpreting and executing recipes with a cooking robot. In Experimental Robotics (pp. 481-495). Springer, Heidelberg.

[20] Livinsa, Z. M., Valantina, G. M., Premi, M. G., & Sheeba, G. M. (2021, March). A Modern Automatic Cooking Machine Using Arduino Mega and IOT. In Journal of Physics: Conference Series (Vol. 1770, No. 1, p. 012027). IOP Publishing.